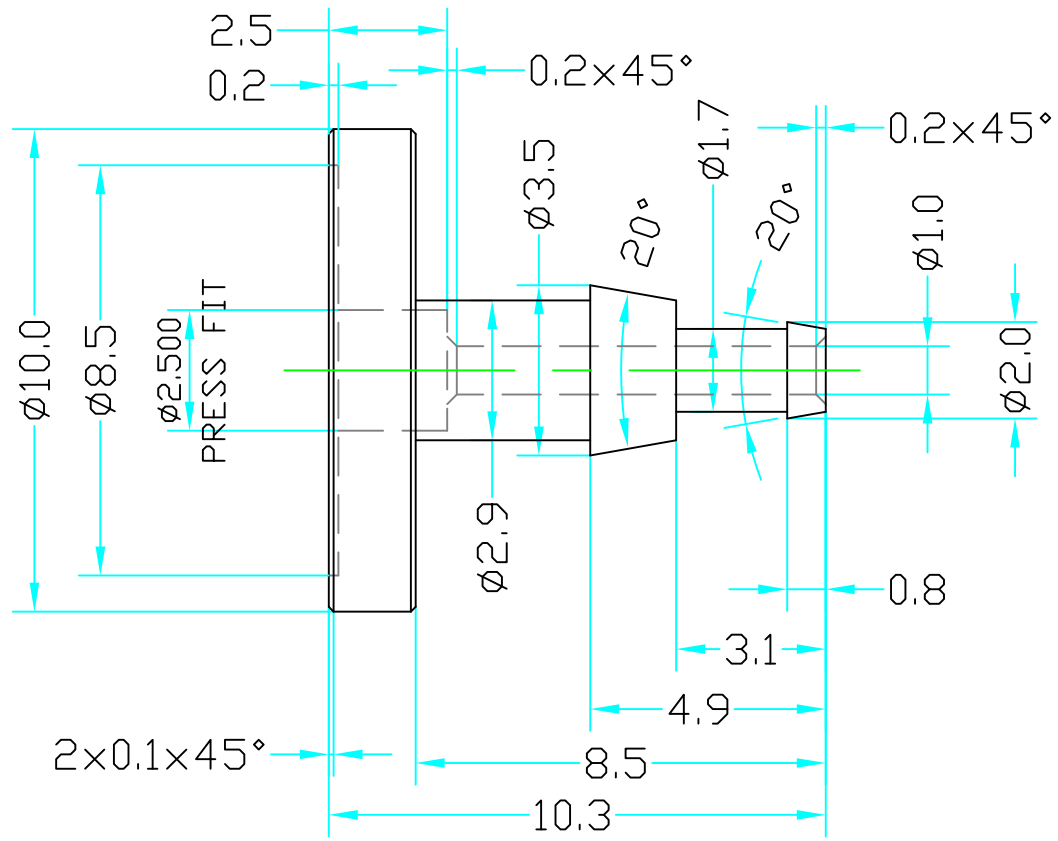

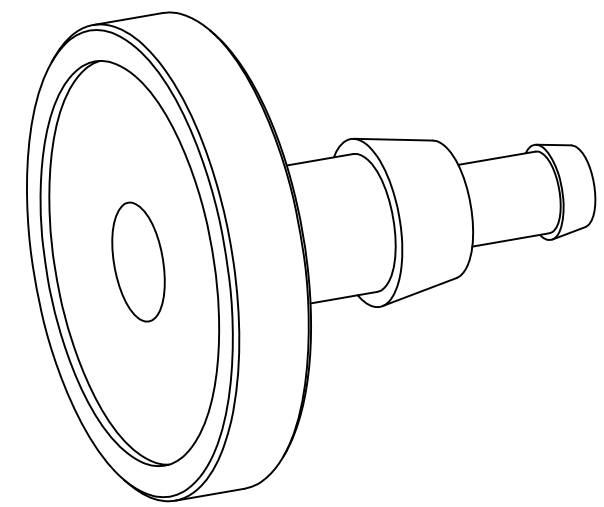

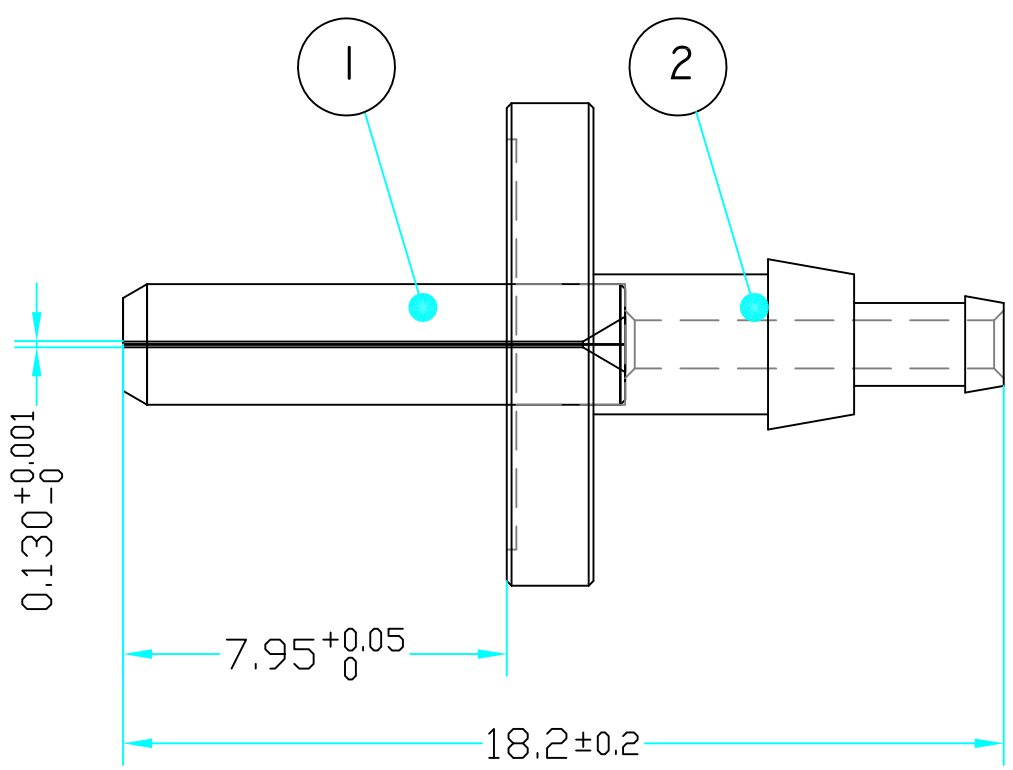

ASSEMBLY

* SEE DRAWING FZI-SC-PC-XXXX FOR MOR DETAIL

REVISIONS				
ZONE	REV	DESCRIPTION	DATE	APPROVED

FIND/REF.#	QTY.	U.M.	PART NAME	MATERIAL	PART DESCRIPTION	REF. SHEET/DWG.
2	1	EA	FLANGE	316 ST/STEEL		
1	1	EA	FERRULE	ZIRCONIA		FZI-SC-PC-XXXX

PARTS LIST

UNLESS OTHERWISE SPECIFIED:

1. DIMENSIONS ARE IN MM.
2. MACHINE SURFACES TO BE FLAT, SQUARE, PARALLEL & CONCENTRIC WITHIN .020 FOR 100 MM OR .020 TIR AS APPLICABLE.
3. MARK ALL DETAILS (EXEMPT COMMERCIAL PARTS) WITH DWG. & ITEM NUMBER.
4. BREAK ALL SHARP CORNERS .25 x 45° CHAMFER.
5. FILLETS SHOWN SHARP = 1.0 RAD.
6. TAPPED HOLES: MIN DEPTH 2.0 x DIA.,
7. C'SINK BORED & REAMED HOLES 1.5 x 45°.
8. CENTERS PERMISSIBLE.
9. DO NOT SCALE DRAWING.
10. ALL WELDING TO CONFORM TO LATEST A.W.S. STANDARDS.

PERMISSIBLE VARIATION IN MM DIMENSIONS WITHOUT TOLERANCES

DIMEN	< 3	3–6	6–10	10–18	18–30	30–50	50–80	80–120
TOLER	±0.05	±0.06	±0.075	±0.09	±0.105	±0.125	±0.150	±0.175
DIMEN	120–180	180–250	250–315	315–400	400–500	500–630	630–800	over 800
TOLER	±0.200	±0.230	±0.260	±0.285	±0.315	±0.350	±0.400	±0.500
ANGLE	±1°	±30'	±20'	±10'	±5'	VALUES ACCORDING SHORT SIDE		

SURFACE TEXTURE 8x12.5

TOLERANCES ARE NOT ACCUMULATIVE

NEXT ASSY	QTY	DRAWING INFORMATION	NAME	DATE
		DRAWN	Andrey	07.01.14
		CHECKED		
		APPROVED		

HIGH ENERGY PHYSICS LABORATORY

ATLAS BRANDEIS

TITLE NSW ALIGNMENT
N–WAY INJECTOR FERRULE
FLANGE 10

SIZE D | SCALE 4:1

PROJECT NUMBER 201

DRAWING NUMBER

SHEET 1 OF 1 | REVISION A