REVISIONS				
ZONE	REV	DESCRIPTION	DATE	APPROVED
C4	B	DIMENSION CHANGED	10.31.17	

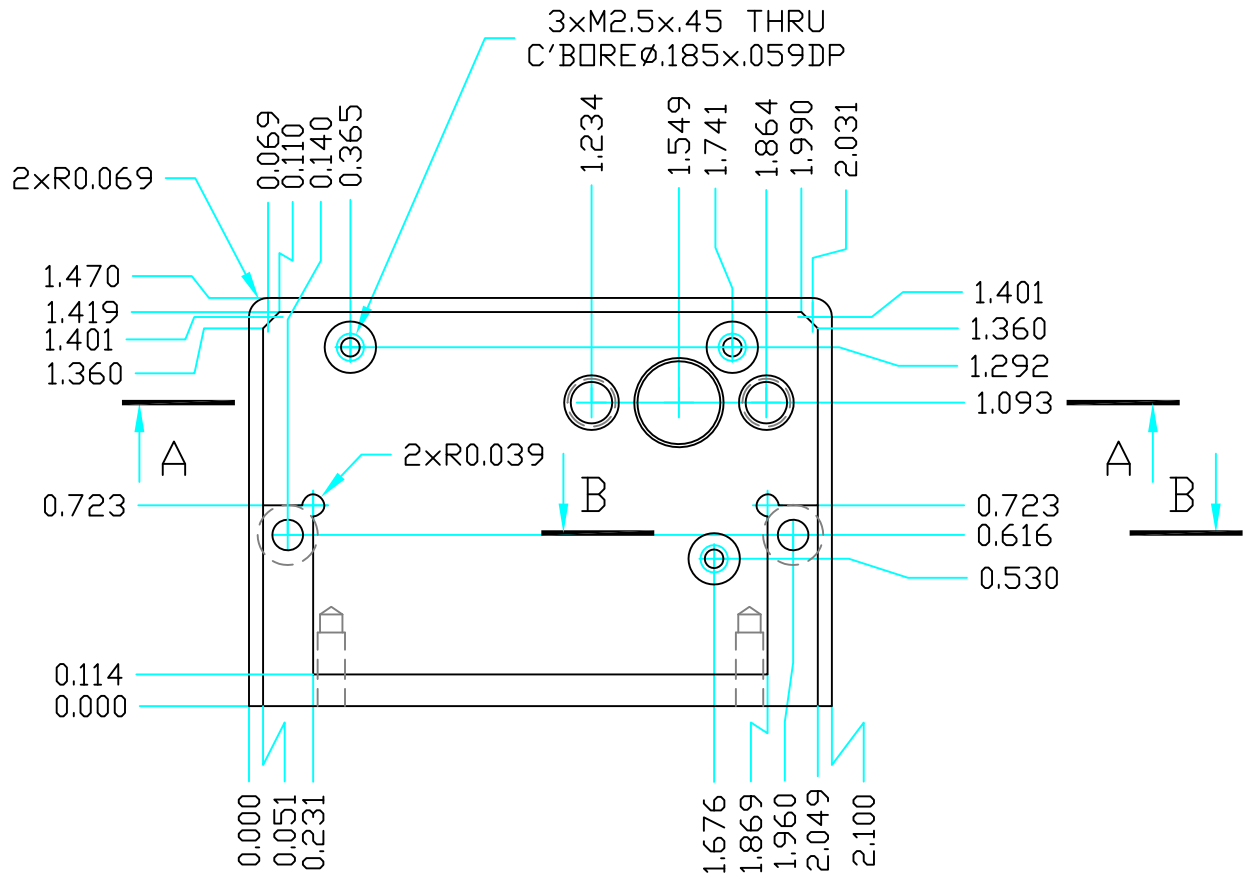

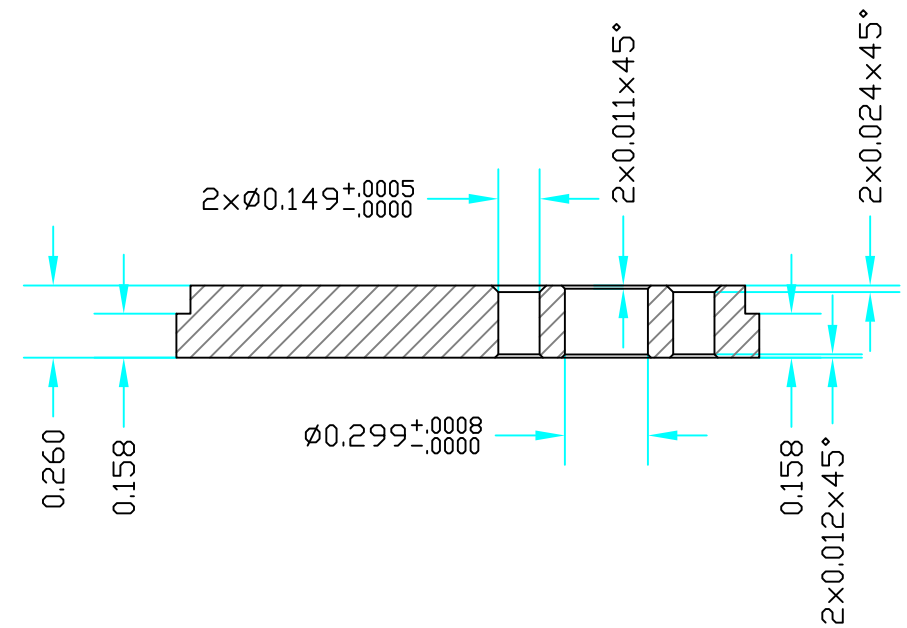

SECTION A-A

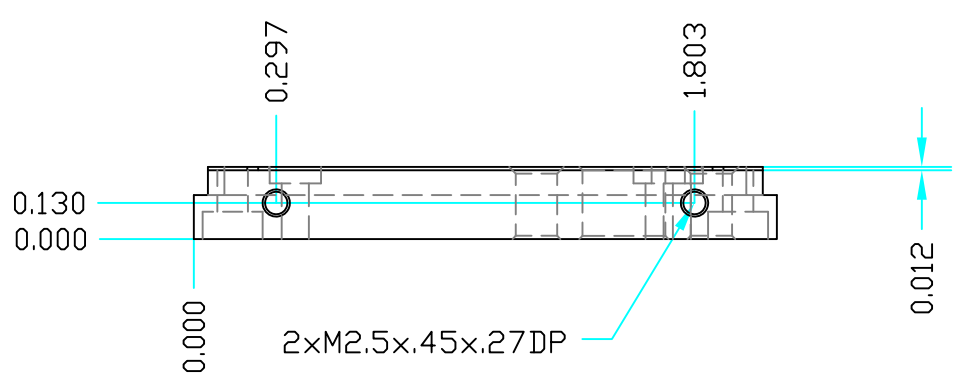

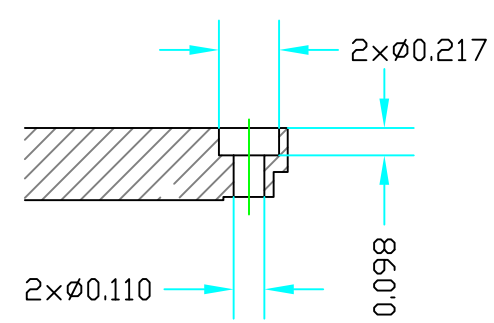

SECTION B-B

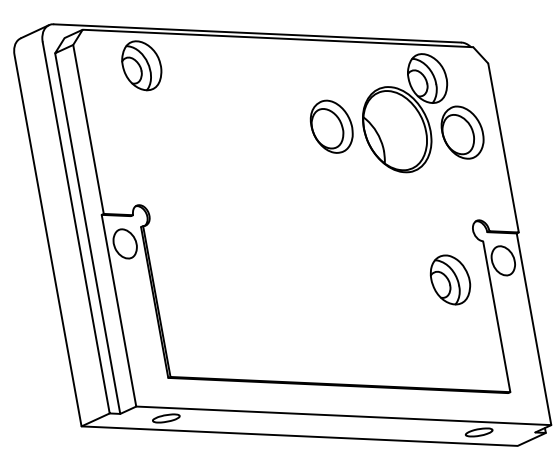

NOTES:
1. DO NOT SANDBLAST
2. MASK ALL THREADS BEFORE PLATING

FIND/REF.#	QTY.	U.M.	PART NAME	MATERIAL	PART DESCRIPTION	REF. SHEET/DWG.
	1	EA	PLATE	ALUMINUM 6061	BLUE ANODIZED	

PARTS LIST

UNLESS OTHERWISE SPECIFIED:

1. DIMENSIONS ARE IN INCHES.
2. MACHINE SURFACES TO BE FLAT, SQUARE, PARALLEL & CONCENTRIC WITHIN .001 FOR 5 INCHES OR .001 TIR AS APPLICABLE.
3. MARK ALL DETAILS (EXEMPT COMMERCIAL PARTS) WITH DWG. & ITEM NUMBER.
4. BREAK ALL SHARP CORNERS .01 x 45° CHAMFER.
5. FILLETS SHOWN SHARP = .04 RAD.
6. TAPPED HOLES: UNIFIED CLASS 2B THREAD, MIN DEPTH 1.5 x DIA.
7. C'SINK BORED & REAMED HOLES 1/16 x 45°.
8. CENTERS PERMISSIBLE.
9. DO NOT SCALE DRAWING.
10. ALL WELDING TO CONFORM TO LATEST A.W.S. STANDARDS

PERMISSIBLE VARIATION IN INCH DIMENSIONS WITHOUT TOLERANCES

FABRICATION TOLERANCES		MACHINING TOLERANCES			
BELOW 12	±0.10	DECIMAL PLACES	X & X.X	X.XX	X.XXX
12 TO 60	±0.13	BELOW 18	±0.015	±0.010	±0.005
60 TO 180	±0.20	18 TO 48	±0.030	±0.020	±0.010
OVER 180	±0.30	OVER 48	±0.045	±0.030	±0.015
ANGLE TOLERANCE ±0.5°		ANGLE TOLERANCE ±0.1°			

SURFACE TEXTURE 125

TOLERANCES ARE NOT ACCUMULATIVE

NEXT ASSY	QTY	DRAWING INFORMATION	NAME	DATE
		DRAWN	ANDREY	10.06.17
		CHECKED	JB	
		APPROVED		

HIGH ENERGY PHYSICS LABORATORY

ATLAS
BRANDEIS

TITLE
NSW ALIGNMENT
D-BCAM BLUE
PLATE FRONT

SIZE D | SCALE 1:1
PROJECT NUMBER 500
DRAWING NUMBER 500.12.02.01
SHEET 1 OF 1 | REVISION B