REVISIONS				
ZONE	REV	DESCRIPTION	DATE	APPROVED
4B	B	WALL LENGTHEN	03.25.15	JB

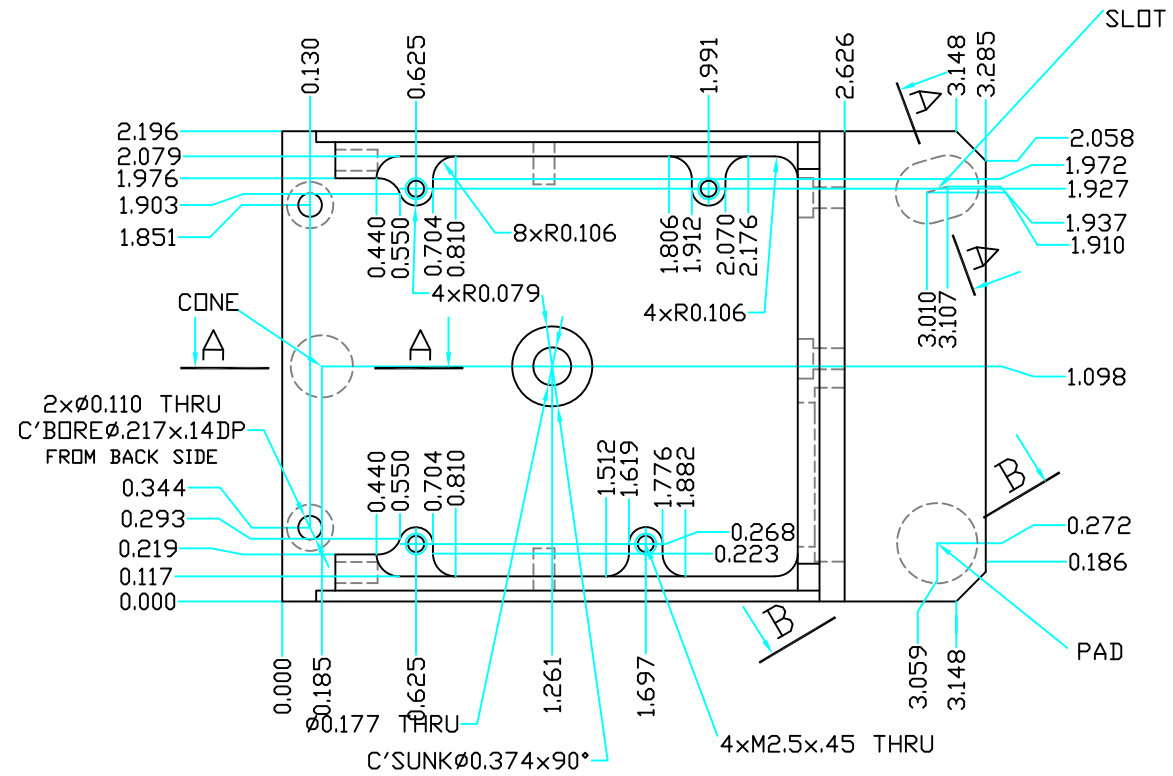

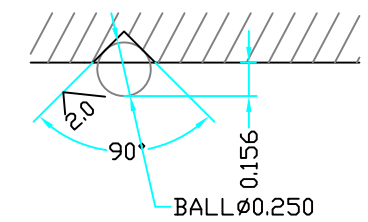

SECTION A-A
CONE AND SLOT DETAILS

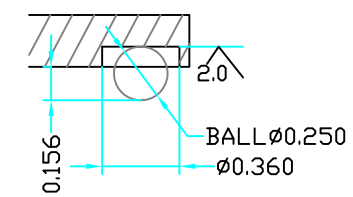

SECTION B-B
PAD DETAILS

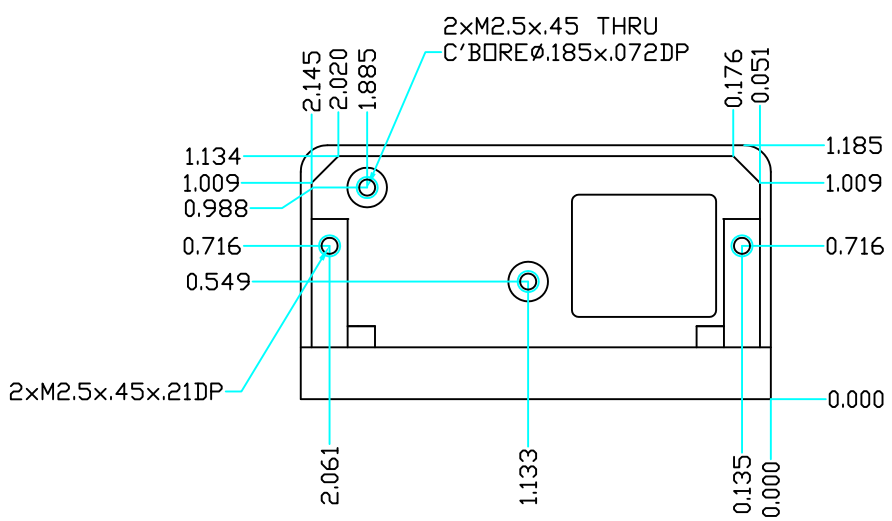

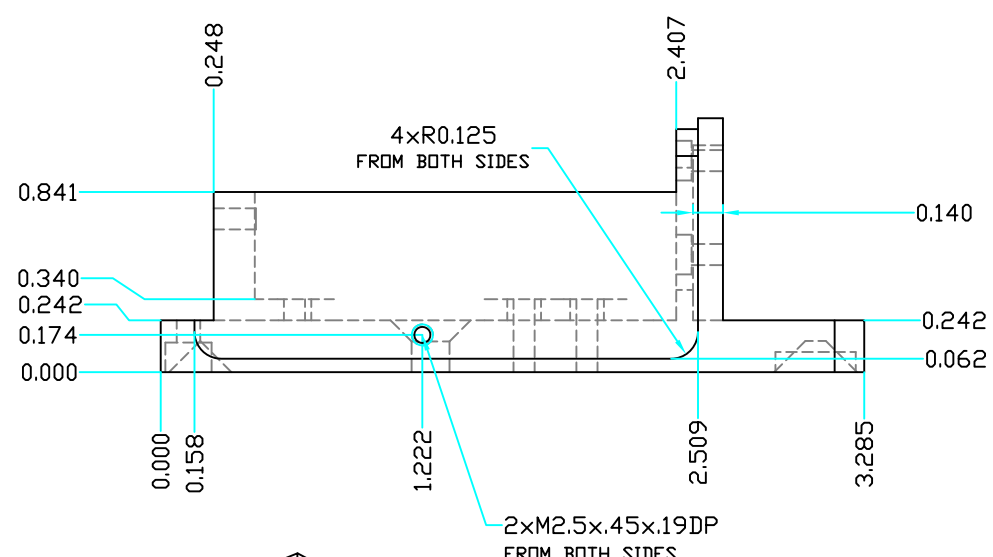

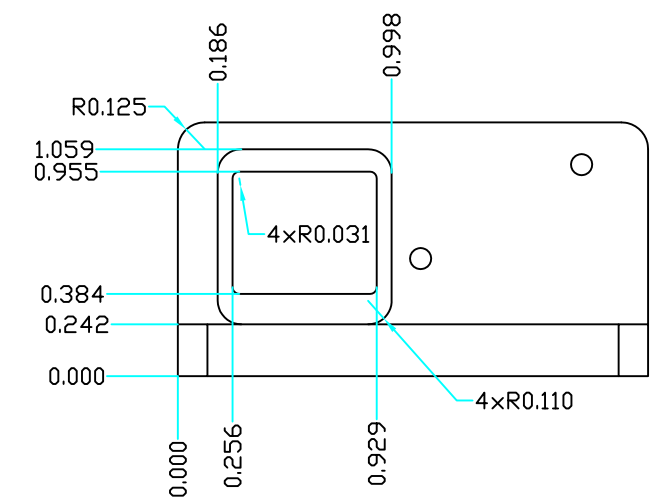

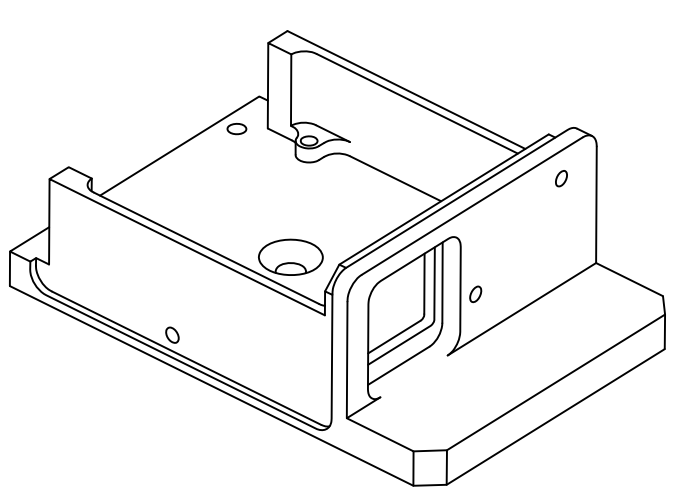

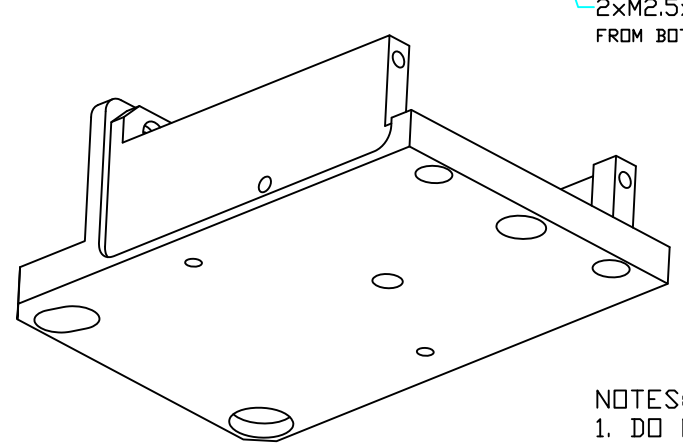

NOTES:
1. DO NOT SANDPLAST
2. MASK ALL THREADS BEFORE PLATING

FIND/REF.#	QTY.	U.M.	PART NAME	MATERIAL	PART DESCRIPTION	REF. SHEET/DWG.
	1	EA	BASE	ALUMINUM 6061	BLACK ANODIZED	

PARTS LIST

UNLESS OTHERWISE SPECIFIED:

1. DIMENSIONS ARE IN INCHES.
2. MACHINE SURFACES TO BE FLAT, SQUARE, PARALLEL & CONCENTRIC WITHIN .001 FOR 5 INCHES OR .001 TIR AS APPLICABLE.
3. MARK ALL DETAILS (EXEMPT COMMERCIAL PARTS) WITH DWG. & ITEM NUMBER.
4. BREAK ALL SHARP CORNERS .01 x 45° CHAMFER.
5. FILLETS SHOWN SHARP = .04 RAD.
6. TAPPED HOLES: UNIFIED CLASS 2B THREAD., MIN DEPTH 1.5 x DIA.
7. C'SINK BORED & REAMED HOLES 1/16 x 45°.
8. CENTERS PERMISSIBLE.
9. DO NOT SCALE DRAWING.
10. ALL WELDING TO CONFORM TO LATEST A.W.S. STANDARDS

PERMISSIBLE VARIATION IN INCH DIMENSIONS WITHOUT TOLERANCES

FABRICATION TOLERANCES		MACHINING TOLERANCES			
BELOW 12	±0.10	DECIMAL PLACES	X & X.X	X.XX	X.XXX
12 TO 60	±0.13	BELOW 18	±0.015	±0.010	±0.005
60 TO 180	±0.20	18 TO 48	±0.030	±0.020	±0.010
OVER 180	±0.30	OVER 48	±0.045	±0.030	±0.015
ANGLE TOLERANCE ±0.5°		ANGLE TOLERANCE ±0.1°			

SURFACE TEXTURE 125

TOLERANCES ARE NOT ACCUMULATIVE

NEXT ASSY	QTY	DRAWING INFORMATION	NAME	DATE
		DRAWN	ANDREI	01.20.15
		CHECKED	JB	
		APPROVED		

HIGH ENERGY PHYSICS LABORATORY

ATLAS
BRANDEIS

TITLE
NSW ALIGNMENT
BCAM BLACK
BASE

SIZE	SCALE
D	1:1

PROJECT NUMBER: 500

DRAWING NUMBER: 500.10.00.01

SHEET	REVISION
1 OF 1	B